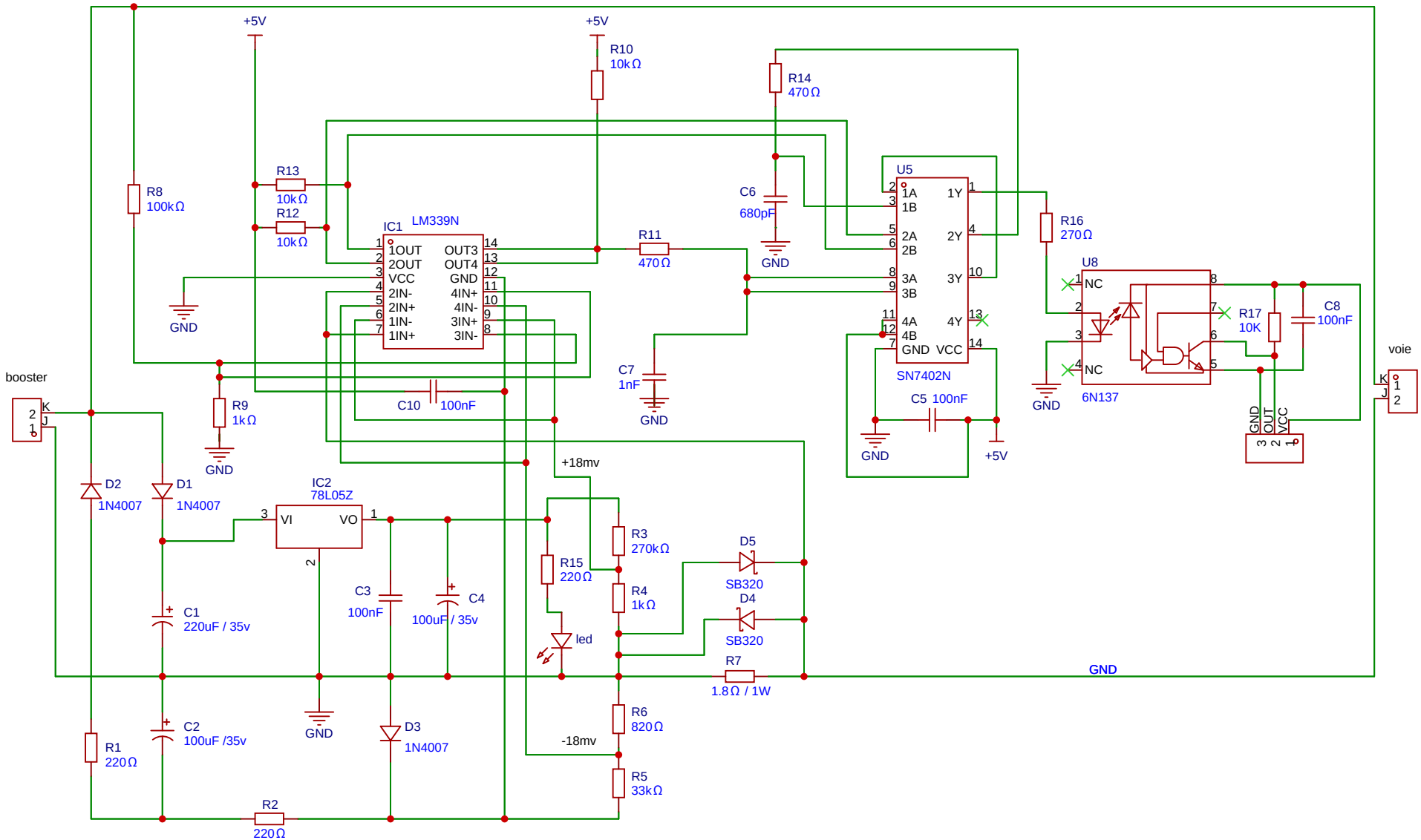

TITLE: railcom_v1		REV: 1.0
EasyEDA	Company: Your Company	Sheet: 1/1
	Date: 2024-02-02 Drawn By: Christophe BOBILLE	